End panel for C30-10DR-M

Front panel with winch door

ASSEMBLY ON 40GP or 40HQ CONTAINER

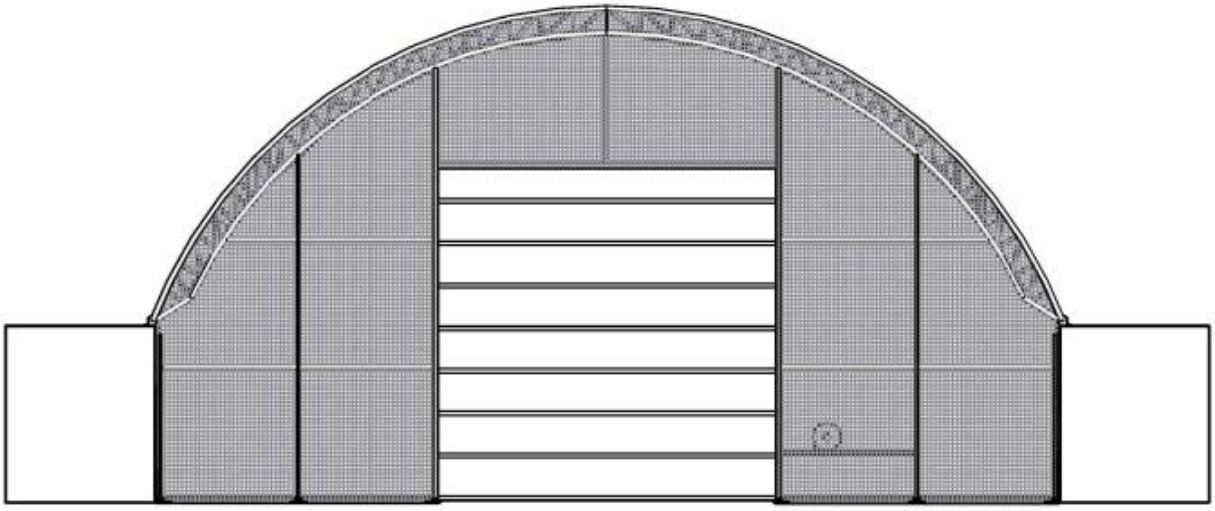

Door size:H13ft*W13ft

Parts List		
Code	Description	Qty
F1L	Left Base plate for the door	2
F1R	Right Base plate for the door	2
F2L	Container side left standing legs	1
F2R	Container side right standing legs	1
F3L	Left lower door track	1
F3R	Right lower door track	1
F4L	Left upper door track	1
F4R	Right upper door track	1
F5	Coil tube along the door side	2
F6	Tension Female Tube For Door beam	1
F7	Tension Male Tube For door beam	1
F8	Door Beam	1
F9	Diagonal Support Tube for door beam	1
F9A	Clips without bolts	1
F10	Horizontal pipe of the front panle at the shoulder	2
F11	Horizontal pipe of the front panle	2
F12	Horizontal pipe of Mechanical wheel	1
F13	Tension tube at the bottom of front panel	2
F14	Female Tube for doors	7
F15	Male Tube for doors	7
F16	Door clamping piece (40*60square tube)	8
F17	Fixing iron of the legs along the container	2
F18	Front cover	1
F19	25 PPR tube	40
F20L	Added door edge on the left	1
F20R	Added door edge on the right	1
F21	Half arc fired inclined 3 hole iron plate	4
F22	Half arc fired straight 3 hole iron plate	1

U25	Stake peg	8
U27	Mechanical wheel with wire rope	1
U1	Rope	10m
U2	Ratchet with band	100
U14	Round plug	4
U20	Square plug	4
S18	Hexagon bolt M10*30	4
S17	Hexagon bolt M10*50	1
S16	Hexagon bolt M10*60	2
S15	Hexagon bolt M10*90	17
S41	self-tapping screw M5.5*25	172
S30	flange nut M10	23
S35	Hexagon nut M10	1
S25	Plain washer M10	2

A Front wall assembly

1. Fix the basement

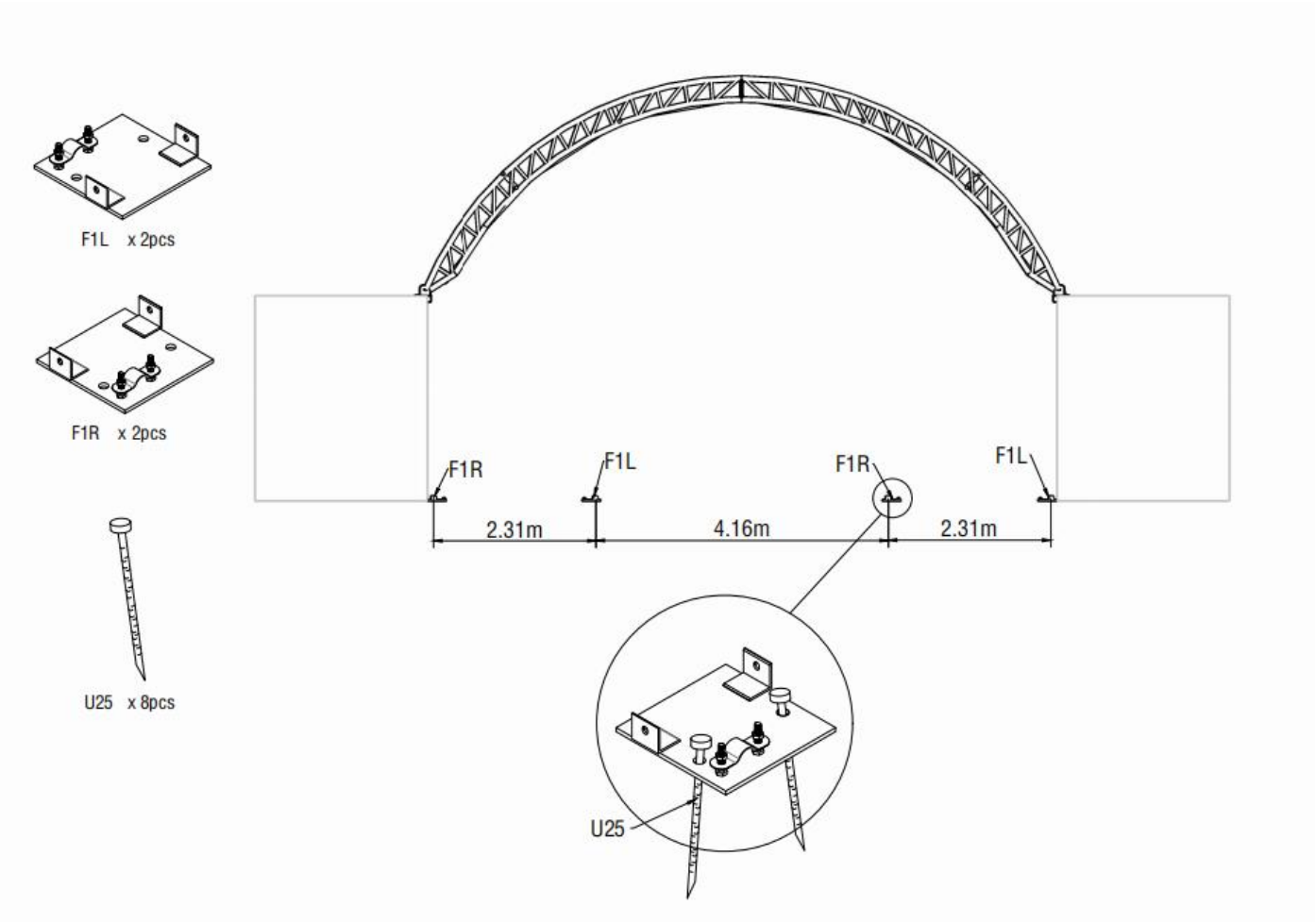

As Above Figures shows, find out all spare parts for the front wall.

2. Install on GP container

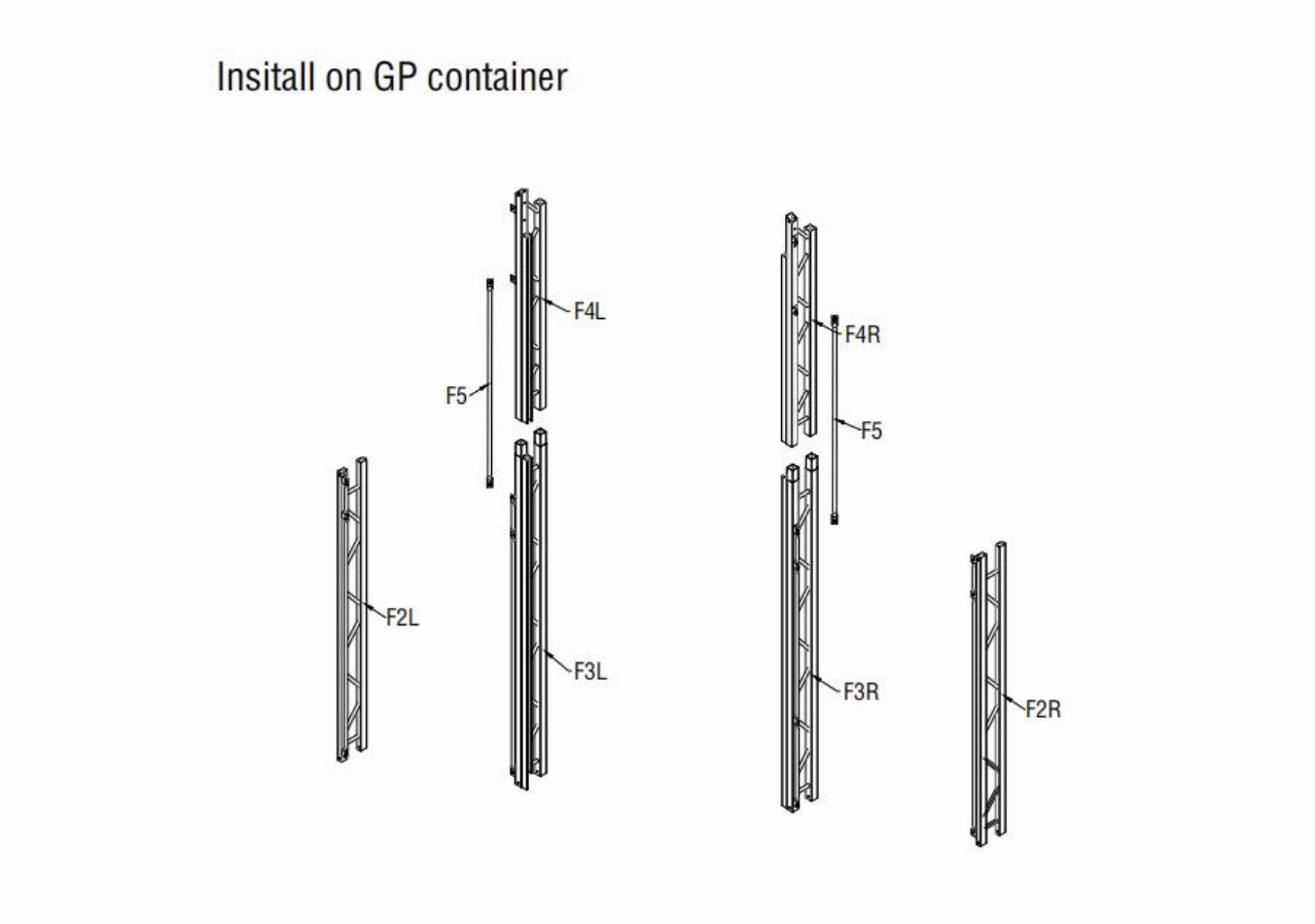

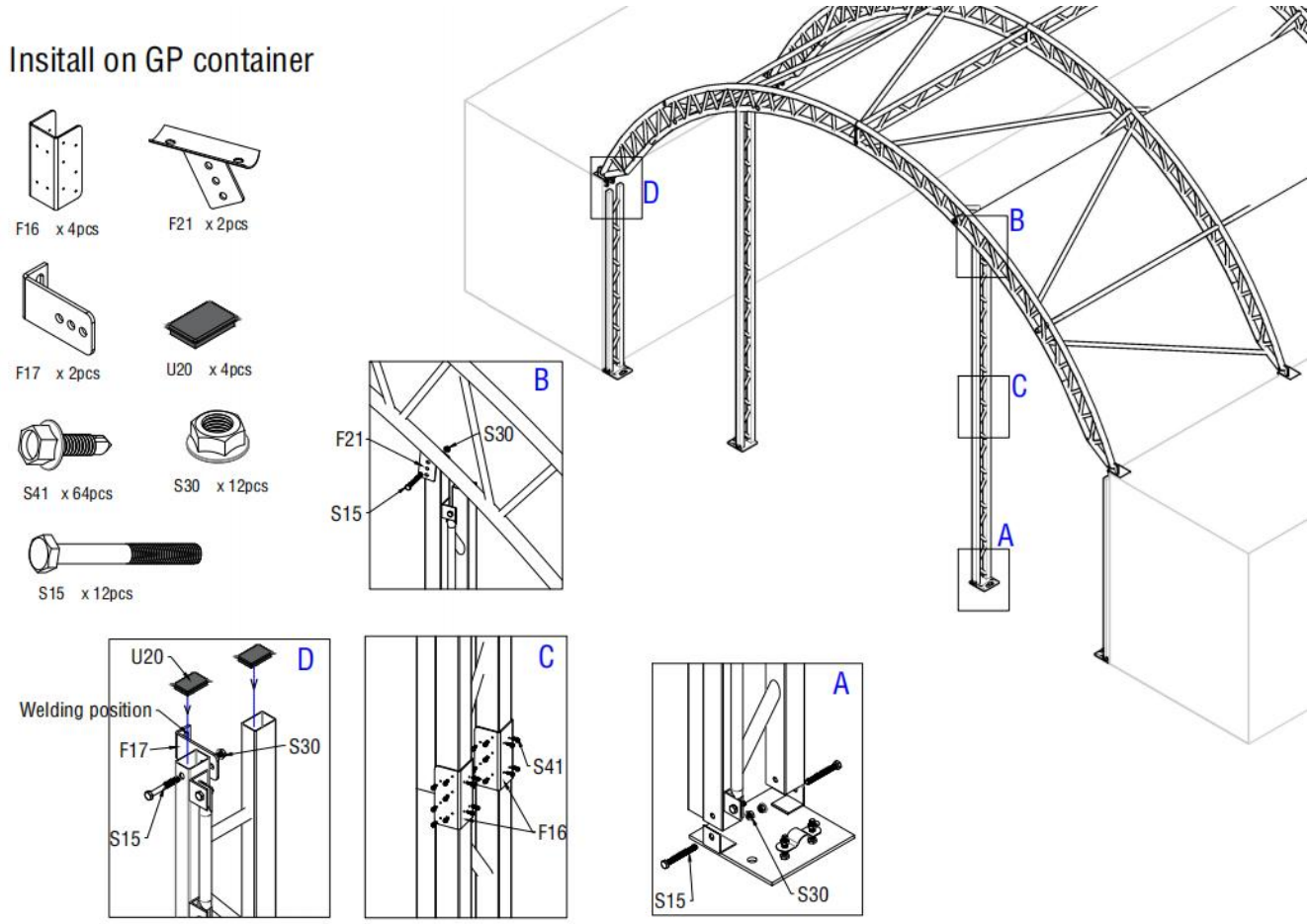

As Above Figures shows, find out all spare parts for the front wall connect them together by use screw, make sure the spacing. There are stake pegs for base plates.

3. Install on HQ container

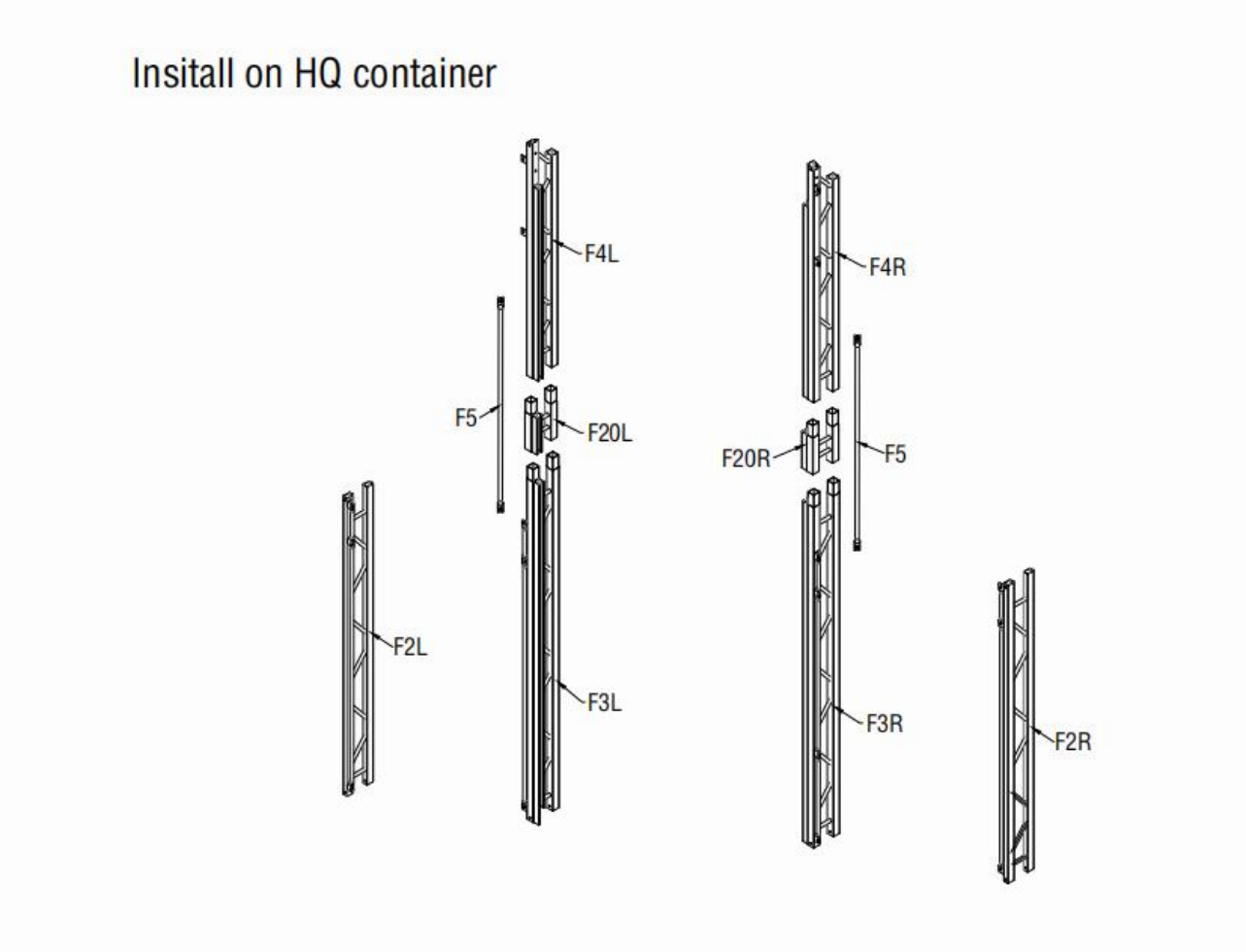

Insitall on HQ container

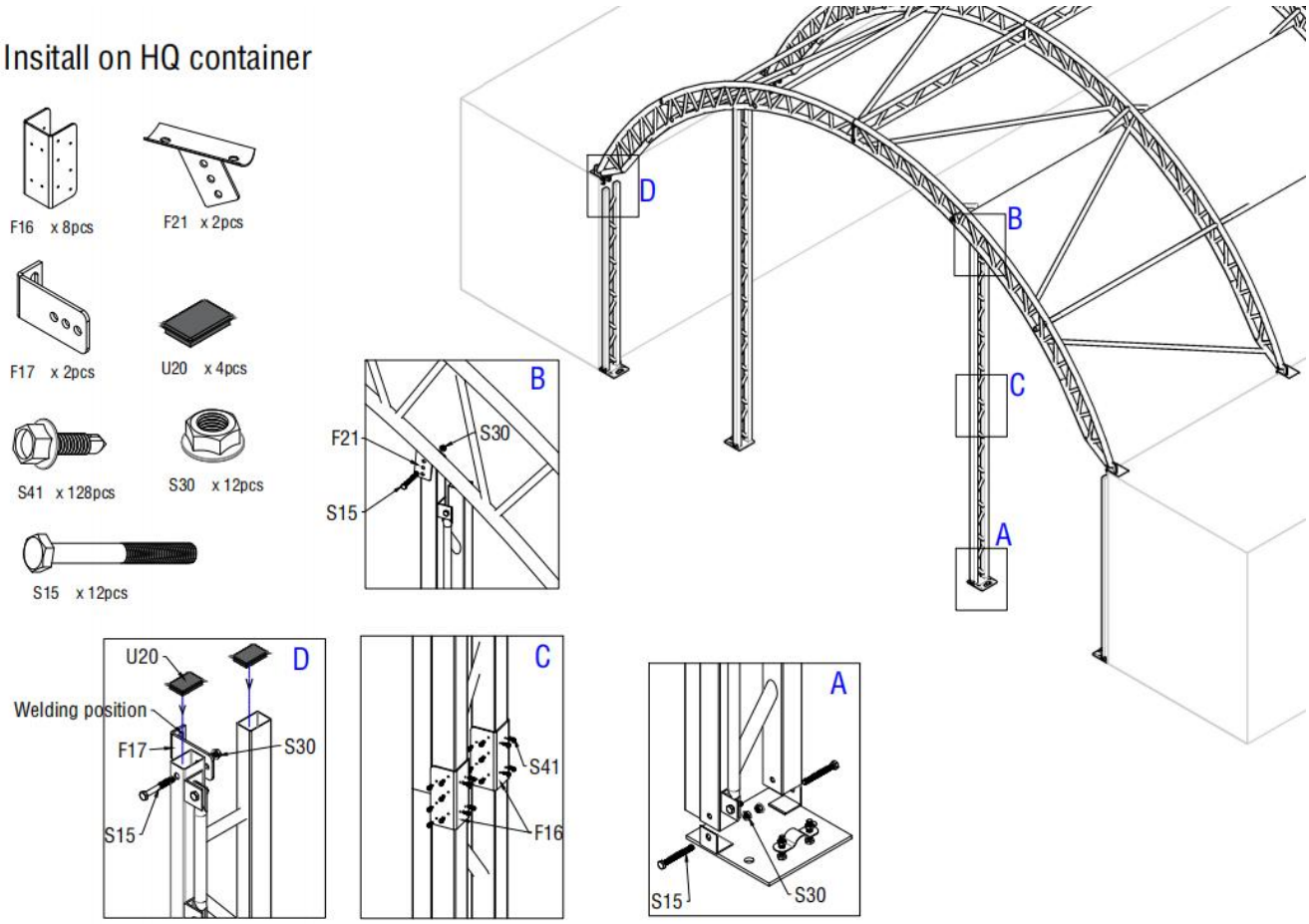

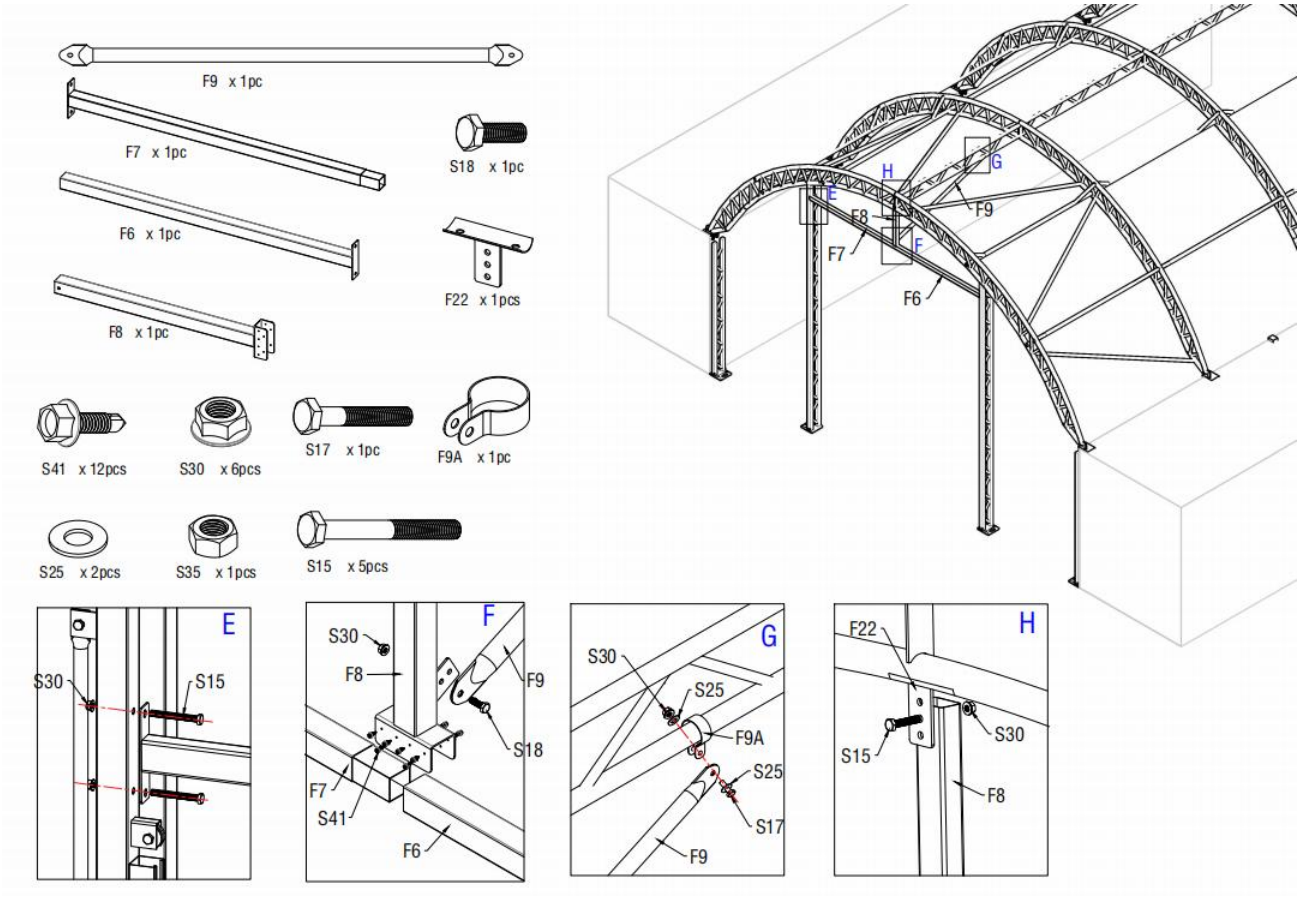

As Above Figures shows, find out all spare parts for the front wall. connect them together by use screw, make sure the spacing. There are stake pegs for base plates.

B Install the door suitable for GP & HQ container

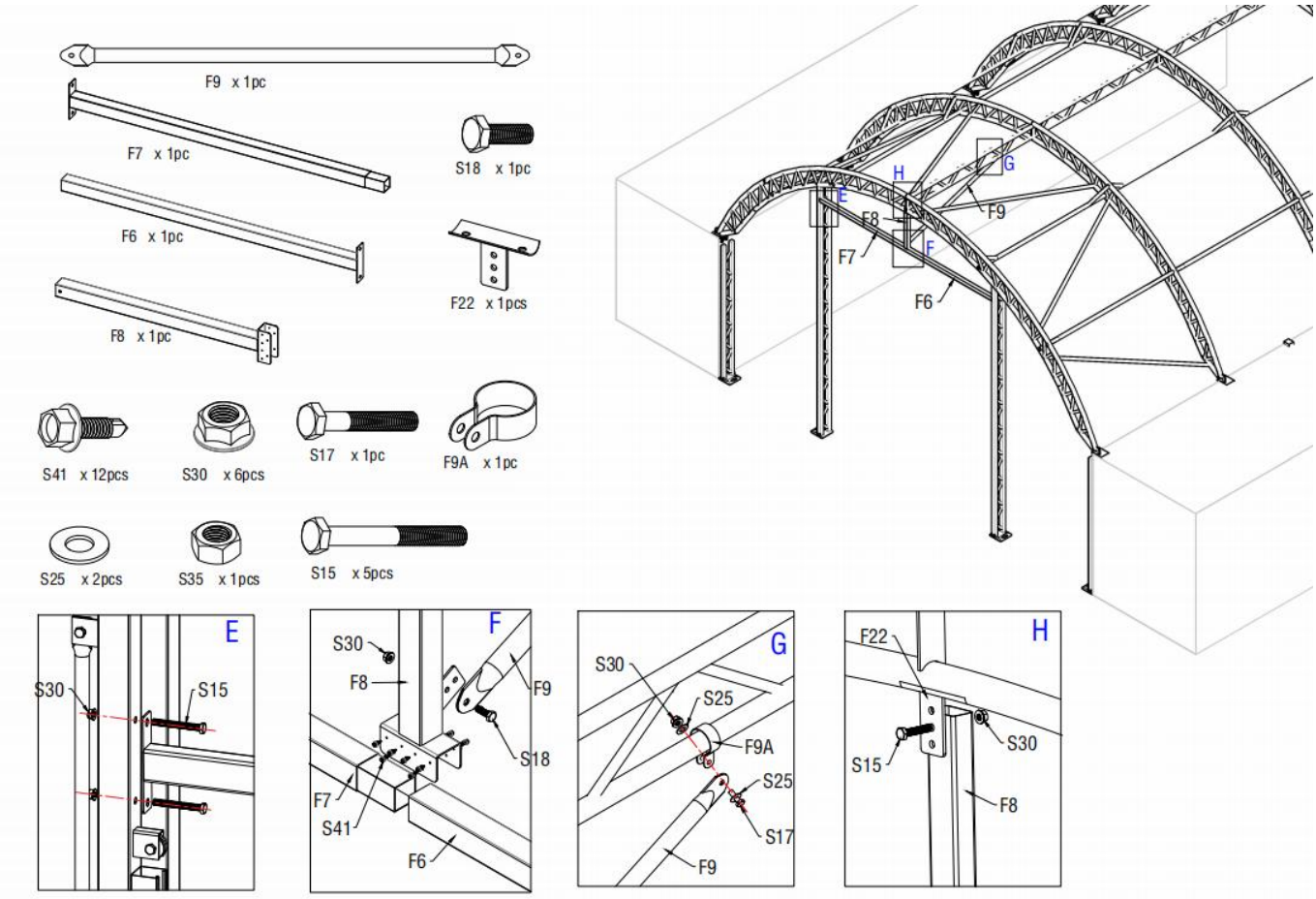

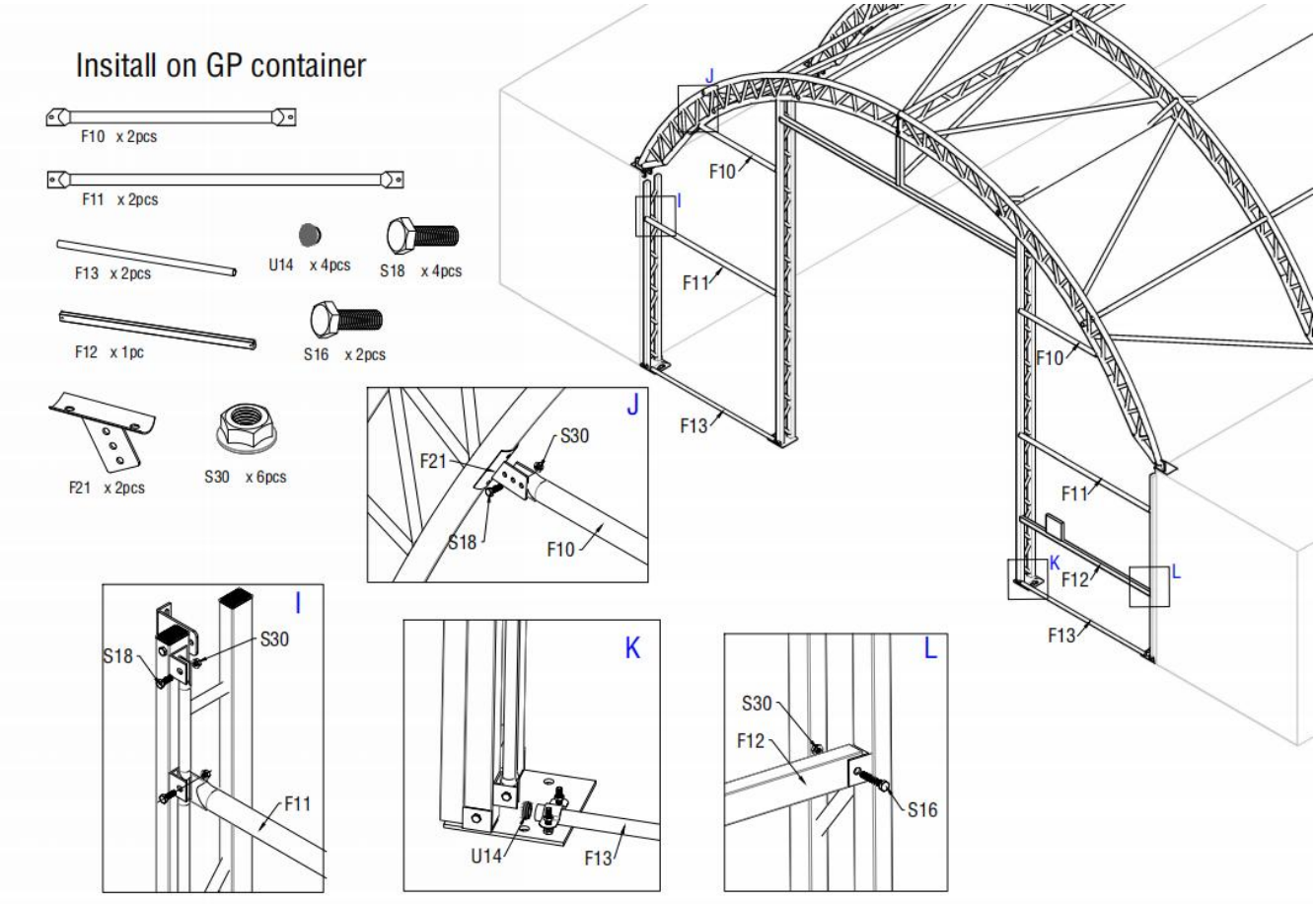
Insitall on GP container
F10 x 2pcs
F11 x 2pcs
F13 x 2pcs
U14 x 4pcs
S18 x 4pcs
F12 x 1pc
S16 x 2pcs
F21 x 2pcs
S30 x 6pcs
J
F21
S30
S18
F10
I
S18
S30
F11
K
U14
F13
L
S30
F12
S16
F10
I
F11
F13
F10
F11
K
F12
L
F13

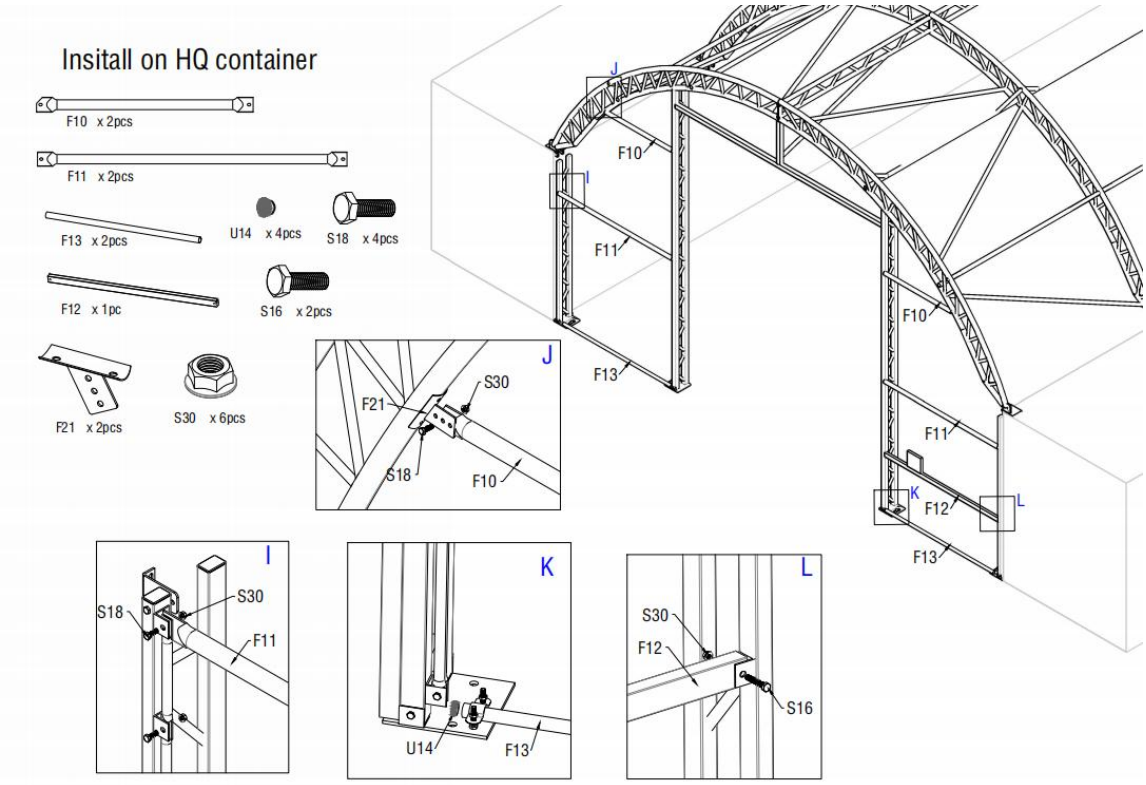
Insitall on HQ container
F10 x 2pcs
F11 x 2pcs
F13 x 2pcs
U14 x 4pcs
S18 x 4pcs
F12 x 1pc
S16 x 2pcs
F21 x 2pcs
S30 x 6pcs
J
F21
S30
S18
F10
I
S18
S30
F11
K
U14
F13
L
S30
F12
S16
F10
I
F11
F13
F10
F11
K
F12
L
F13

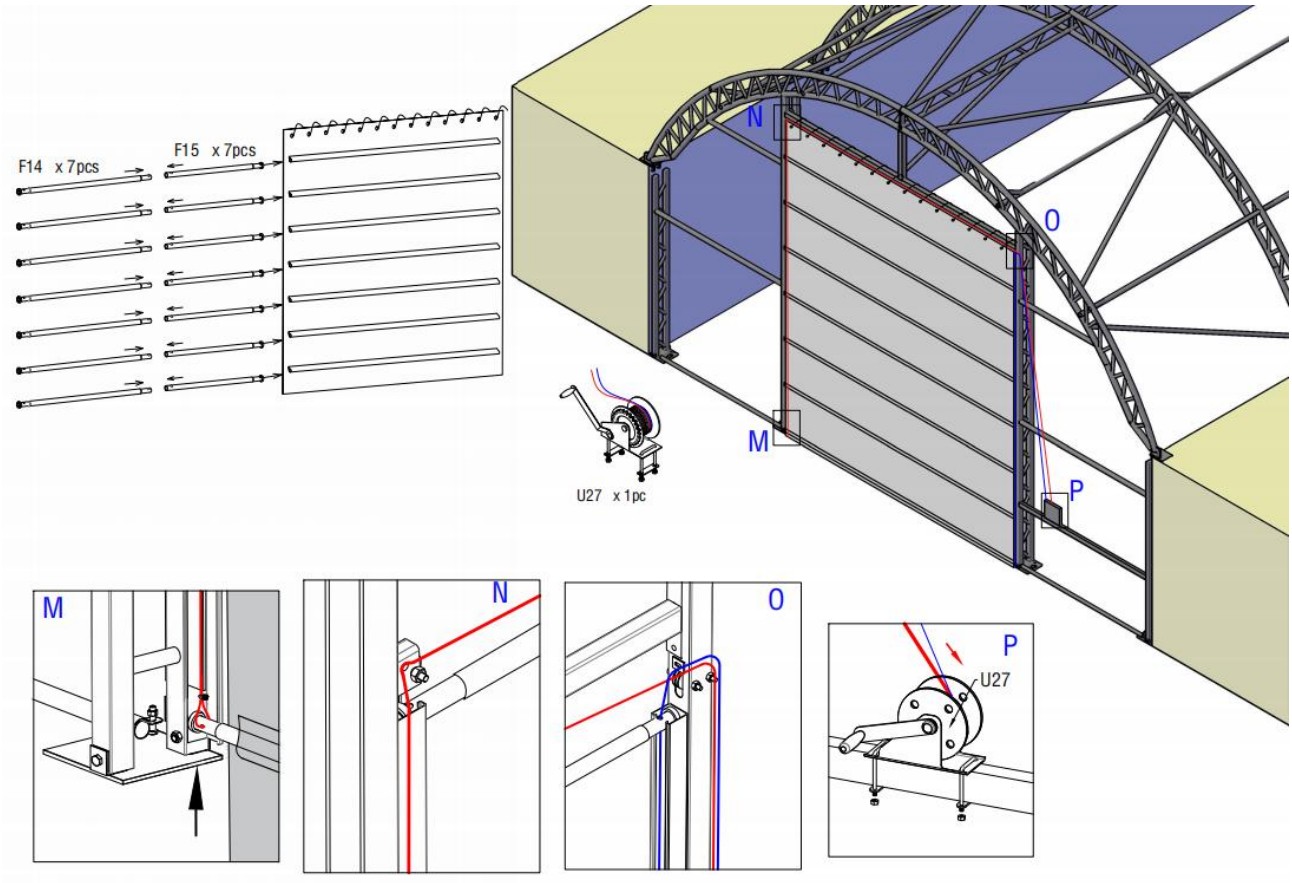
F14 x 7pcs
F15 x 7pcs
U27 x 1pc
N
O
M
P
M
N
O
P
U27

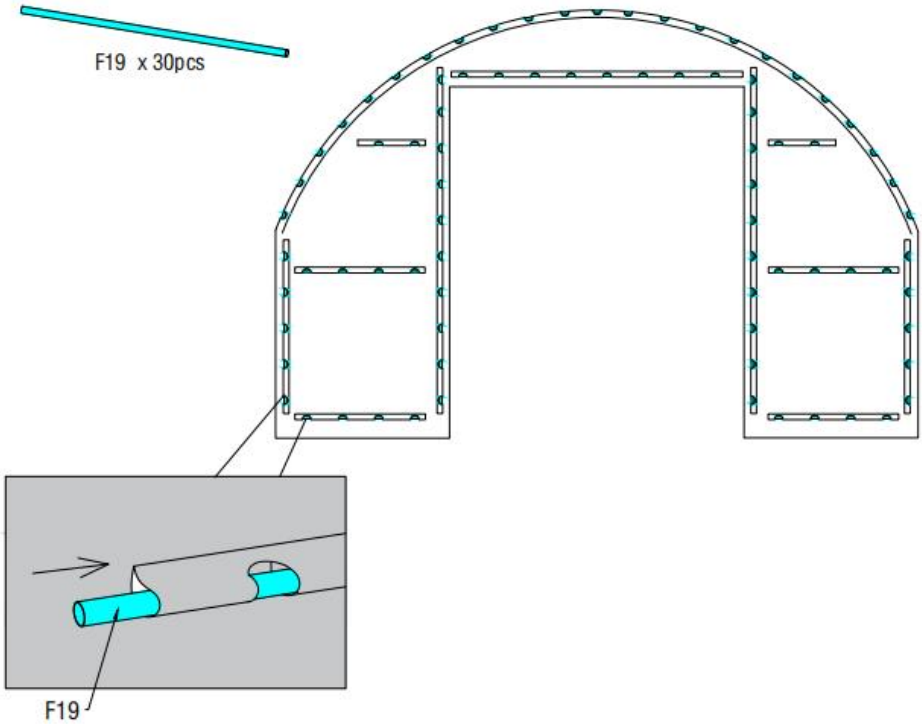
F19 x 30pcs
F19

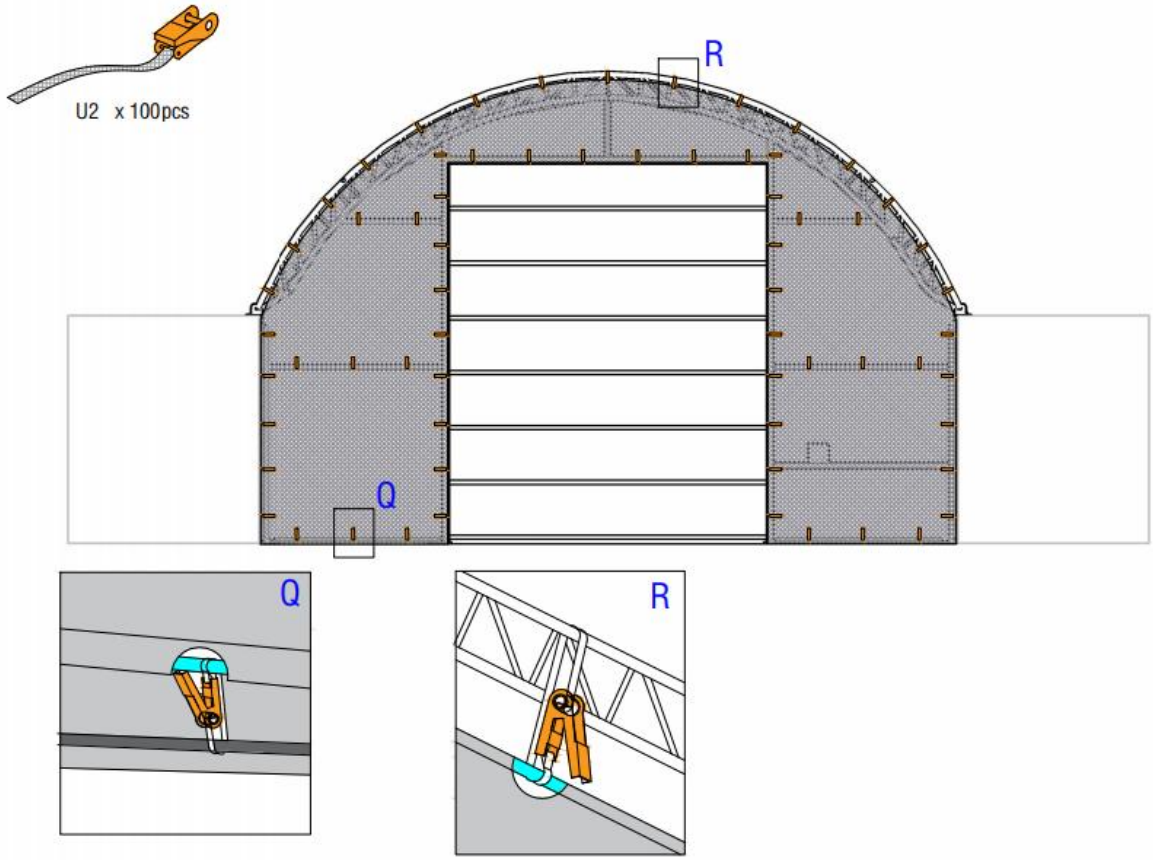

1. Spread the door cover on the ground, and insert the female dropping Tube for doors (No. F14) and male dropping Tube for doors(No.F15) into the horizontal fabric pouch of the door cover.
2. Wrap the steel wire on the winch wheel. Put steel wire through the double pulley to the single pulley. The other end of steel wire through the double pulley directly.
3. Then let the installed steel wire go down through the dropping tube hole separately from top to bottom. Tie a knot in the bottom of door dropping tube, so it cannot pass back.
4. Erecting the whole door cover and fix it well on the frame by using rope.
5. Thus, the door can be open and close by operating the winch wheel.

Adjust and tighten them once per month after assembly to make sure them works perfect